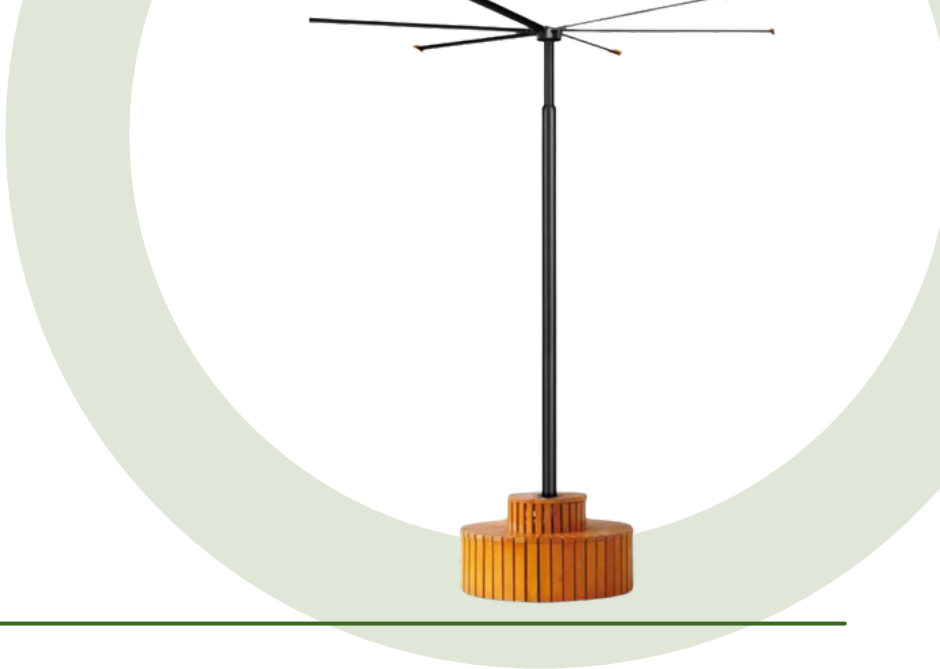

AIRPOLE

The AIRPOLE industrial fan by Anemoi has been designed to provide efficient and silent ventilation in open and closed spaces, ensuring a high level of comfort. Its integrated PMSM motor ensures quiet, low-energy operation, while its robust construction and IP54 protection make it suitable for outdoor use. It is ideal for gourmet terraces, amusement parks, gardens, shopping centres or hotel receptions, providing a powerful and constant air flow in large areas.

TECHNICAL DRAWING

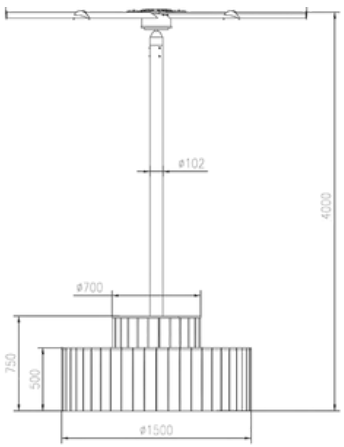

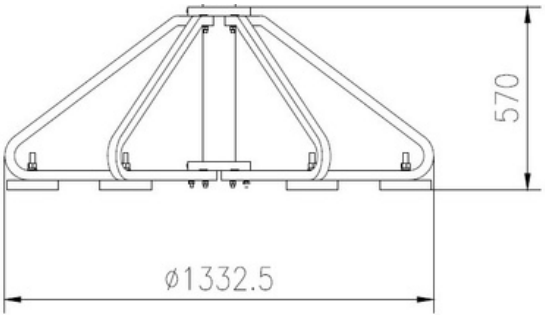

CONTROL

ANEMOI®
Fans for life

Balboa Avenue, East 27th Street, Balboa Tower Office Center, 12th Floor, Office 12-J, Panama City

+50767546775 info@anemoifans.com

Specifications	AIRPOLE 370	AIRPOLE 430
Diameter	368 cm (12.1 ft)	428 cm (14.0 ft)
Number of blades	6 aluminum 6063 blades	6 aluminum 6063 blades
Standard color	Black	Black
Motor power	1,00 kW	1,25 kW
Power supply	220VAC I / 380VAC III, 50/60 Hz	220VAC I / 380VAC III, 50/60 Hz
Protection rating	IP54	IP54
Total weight	242 kg (533.5 lb)	245 kg (540.1 lb)
Sound level	<40 dBA	<40 dBA
Motor type	PMSM	PMSM
Airflow	20,400 m^3/h	23,400 m^3/h
Maximum speed	95 rpm	90 rpm
Coverage	68 m^2 (732.0 ft^2)	78 m^2 (839.6 ft^2)

The technical documentation is updated periodically. Anemoi reserves the right to modify all or part of the content of this document without prior notice.